WIRELESS DOOR LOCK CONTROL (LHD)

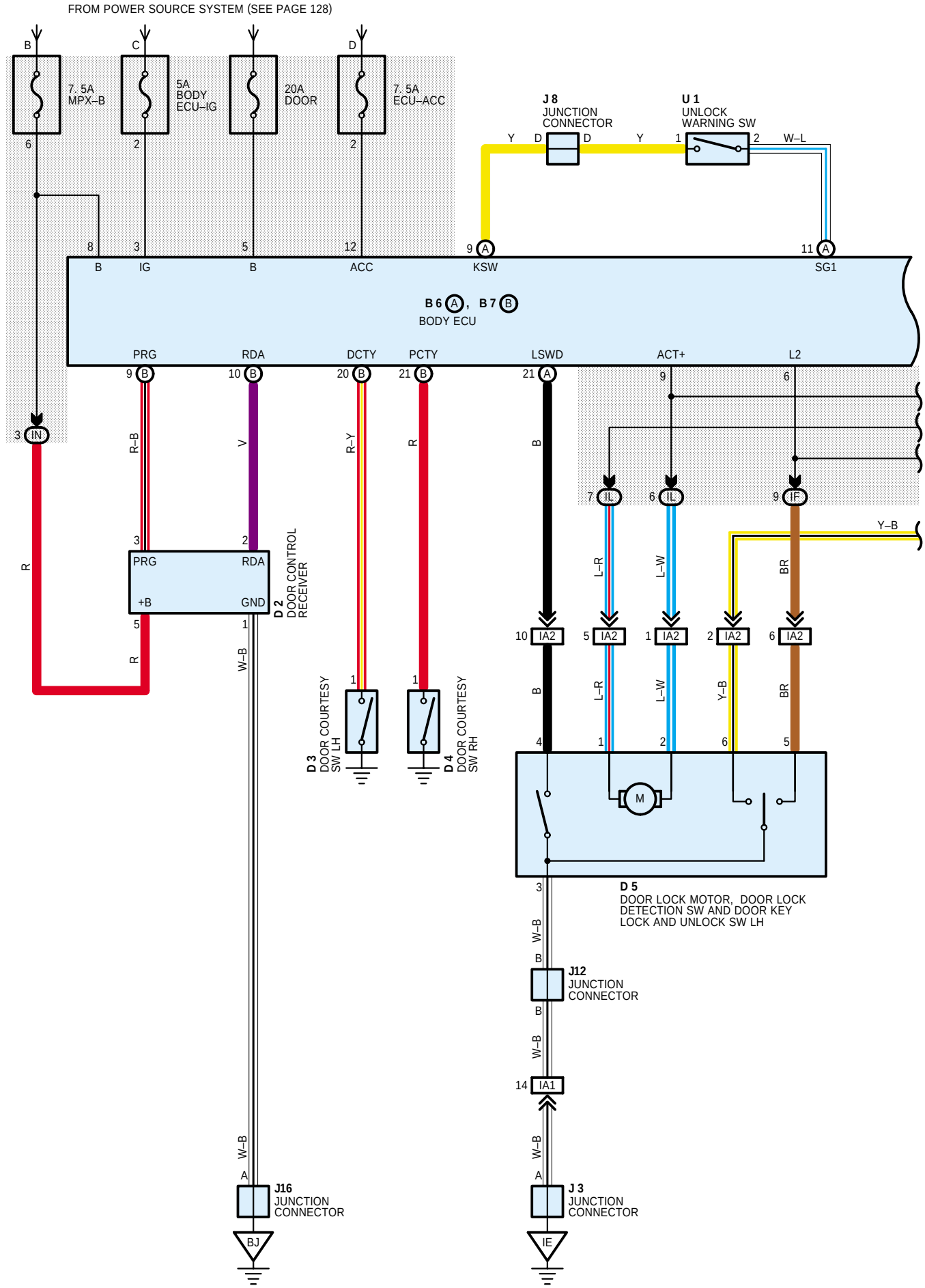

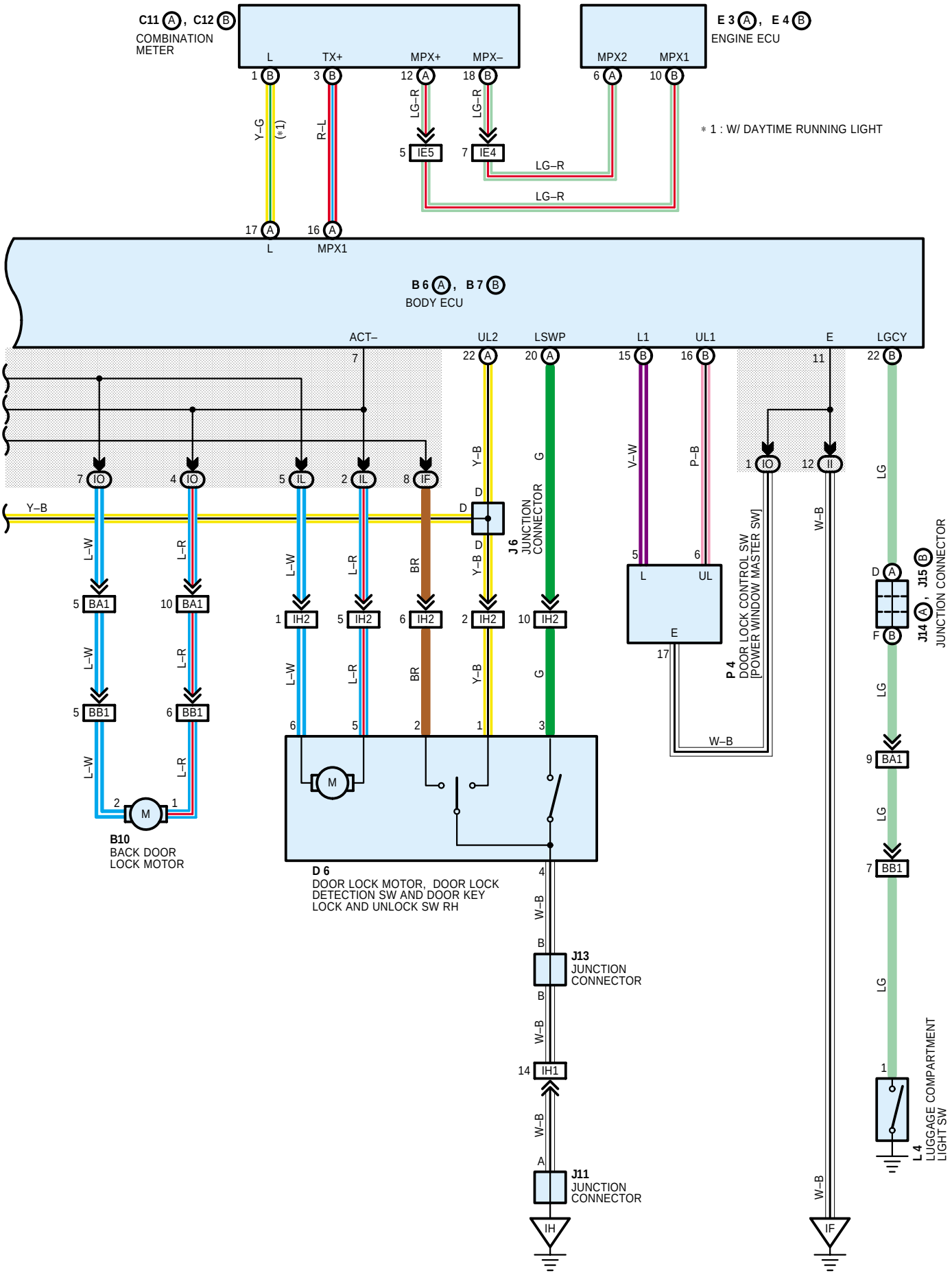
C11 A, C12 B
COMBINATION METER
L
TX+
MPX+
MPX–
E 3 A, E 4 B
ENGINE ECU
MPX2
MPX1
Y–G
(*1)
R–L
LG–R
IE5
IE4
* 1 : W/ DAYTIME RUNNING LIGHT
MPX1
B 6 A, B 7 B
BODY ECU
ACT–
UL2
LSWP
L1
UL1
E
LGCY
IO
IL
IF
Y–B
G
V–W
P–B
LG
L–W
L–R
BR
BA1
BB1
IH2
J 6
JUNCTION CONNECTOR
P 4
DOOR LOCK CONTROL SW
[POWER WINDOW MASTER SW]
W–B
J14 A, J15 B
JUNCTION CONNECTOR
B10
BACK DOOR LOCK MOTOR
D 6
DOOR LOCK MOTOR, DOOR LOCK DETECTION SW AND DOOR KEY LOCK AND UNLOCK SW RH
J13
JUNCTION CONNECTOR
IH1
J11
JUNCTION CONNECTOR
IH
IF
L 4
LUGGAGE COMPARTMENT LIGHT SW